Partnership. With Guarantee.

Shut-off valve made of grey cast iron
Series GL119



Design type	Shut-off valve in in-line design with back seal and Stuffing box packing, metallic sealing, rising stem, Painted housing RAL5013, Coating 40µm
Actuation	by handwheel made of steel
Connection	Flanges DN15...DN250 according to EN1092-2 PN16
Overall length	corresponding DIN EN558-1R1
Materials	Housing Grey cast iron EN-JL1040, Seat, Cone and Spindle Stainless steel AISI 420, Handwheel Steel, Package Graphite
Application range	Fluids and gases of group 1 and 2 according to PED 2014/68/EU that do not attack the materials used.
Medium temperature	-10...+300°C
Operating pressure	Nominal pressure according to pressure-temperature table
Mounting type	Installation in rigid piping system
Mounting position	any
Approvals	ATEX on request
Special versions	Control cone, Cone with soft seal

Pressure-temperature table in bar

-10...+120°C	150°C	200°C	250°C	300°C
16	14,4	12,8	11,2	9,6

Intermediate values of the maximum operating pressures may be calculated by linear interpolation between the nearest lower and higher temperature values.

+43 512 52076
austria@stasto.eu
© STASTO Automation KG

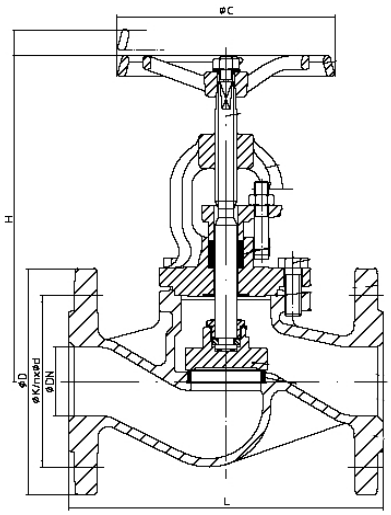

Nominal size DN[mm]	PN [bar]	C	D	H*	K	L	nxd	Kv value [m³/h]	Weight [approx. kg]	Type
15	16	100	95	226	65	130	4 x Ø14	4,6	3,5	GL119-15-W
20	16	100	105	226	75	150	4 x Ø14	7,3	4,5	GL119-20-W
25	16	100	115	232	85	160	4 x Ø14	11,7	5	GL119-25-W
32	16	125	140	233	100	180	4 x Ø18	16,8	6,5	GL119-32-W
40	16	150	150	270	110	200	4 x Ø18	26,7	9,5	GL119-40-W
50	16	150	165	273	125	230	4 x Ø18	42,6	12	GL119-50-W
65	16	200	185	356	145	290	4 x Ø18	77,9	19,5	GL119-65-W
80	16	200	200	360	160	310	8 x Ø18	111	22,5	GL119-80-W
100	16	225	220	405	180	350	8 x Ø18	177	33,5	GL119-100-W
125	16	250	250	450	210	400	8 x Ø18	262	45,5	GL119-125-W
150	16	350	285	510	240	480	8 x Ø22	368	66	GL119-150-W
200	16	400	340	680	295	600	12 x Ø22	664	116	GL119-200-W
250	16	500	405	820	355	730	12 x Ø26	1044	170	GL119-250-W

* Height in open position

Kv value depending on the valve opening for Control cone [m³/h]

Nominal size DN [mm]	15	20	25	32	40	50	65	80	100	125	150	200
20%	0,33	0,84	1,30	2,20	3,72	8,26	8,9	16,1	21,1	35,9	51,1	72
40%	0,99	1,77	2,81	4,53	7,24	14,20	18,0	30,9	40,4	60,9	109	143
60%	2,17	3,52	4,91	8,30	13,50	22,20	34,2	55,2	74,6	103	190	258
80%	3,27	5,47	7,64	12,50	19,80	30,80	53,8	80,4	117	154	252	377
100%	4,19	6,77	9,22	15,40	24,50	36,50	64,1	91,7	138	182	286	446

Illustrations non-binding
Design, dimensional and material changes reserved

+43 512 52076
austria@stasto.eu
© STASTO Automation KG