3-way high pressure ball valve series BA696, BA697

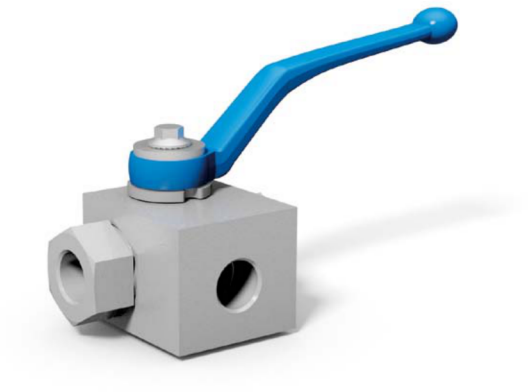

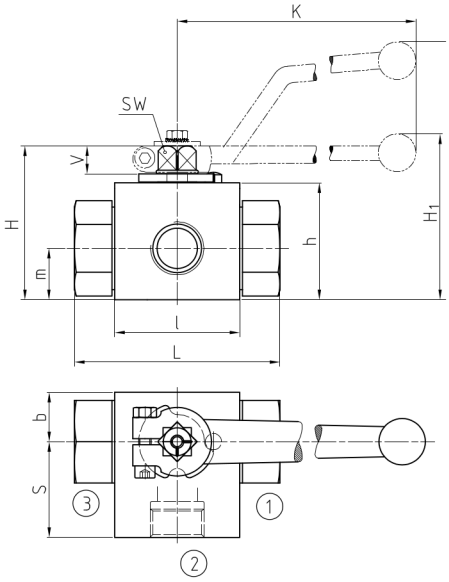

CONNECTION TYPE (CONNECTION 2)

d_1 DIN ISO 228
d_2 ANSI B1.20.1
d_3 SAE J 514/ISO/DIS11926-1

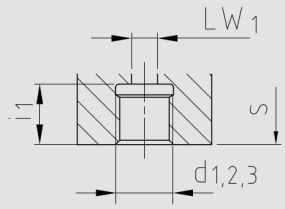

Pressure inlet only from center port (port 2)!

AVAILABLE SIZES

DN4 - DN50 (1/8“ to 2“)

CONNECTIONS

DIN ISO 228 Female thread, ANSI B1.20.1 NPT Female thread, DIN 2353/ISO 8434-1 Light / Heavy series, SAE J 514/ISO/DIS11926-1 Female thread, others on request

ACCESSORIES ON REQUEST

- Locking devices
- Actuators
- Mounting holes
- Position switches
- Combinations
- Detent

MATERIAL CODE DESCRIPTION

Materials				
Body	Stainless Steel	Stainless Steel	Stainless Steel	Stainless Steel
Ball	Stainless Steel	Stainless Steel	Stainless Steel	Stainless Steel
Stem	Stainless Steel	Stainless Steel	Stainless Steel	Stainless Steel
Ball seats	POM	POM	POM	POM
O-rings	NBR	NBR	FPM	FPM
Tmin /Tmax	-30°C / 100°C	-30°C / 100°C	-20°C / 100°C	-20°C / 100°C
Porting pattern	L=SB50	T=SB51	L=SB50	T =SB51

GENERAL DIMENSIONS

Type	l	H	h	m	V	SW	K	H_1	H_2	Lever
BK3-DN4	40	47	33	13,5	11	9	115	-	82	Zn
BK3-DN6	40	47	33	13,5	11	9	115	-	82	Zn
BK3-DN8	40	47	33	13,5	11	9	115	-	82	Zn
BK3-DN10	43	52	38	17,5	11	9	115	-	86	Zn
BK3-DN13	48	54	40	19	11	9	115	-	89	Zn
BK3-DN20	62	75	57	24,5	14	14	200	79	-	Zn
BK3-DN25	66	83	65	29,5	14	14	200	87	-	Zn
BK3-DN25/32	66	83	65	29,5	14	14	200	87	-	Zn
BK3-DN32	81	106	84,5	39	16,5	17	320	115	-	Al
BK3-DN40	104	127	106	53	16,5	17	320	136	-	Al
BK3-DN50	118	137	116	58	16,5	17	320	146	-	Al

Abbildungen unverbindlich, Konstruktions-, Maß- und Werkstoffänderungen vorbehalten
illustrations are non-binding, all designs, configurations, measurements and materials are subject to change without prior notice

© 2020 - STASTO International KG

3-way high pressure ball valve series BA696, BA697

CONNECTION TYPE (CONNECTIONS 1 AND 3)

DIMENSIONS

DIN ISO 228 FEMALE THREAD

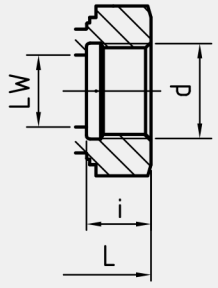

Type	LW	L	b	S	i	d	i_1	d_1	LW_1	Weight [Kg]	PN [bar]
BK3-DN4-G1/8	5	69	13	34,5	10	G1/8	10	G1/8	4	0,55	500
BK3-DN6-G1/4	6	69	13	34,5	14	G1/4	14	G1/4	6	0,55	500
BK3-DN10-G3/8	10	72	16	36	14	G3/8	14	G3/8	10	0,77	500
BK3-DN13-G1/2	13	83	17,5	39,5	16,3	G1/2	16,3	G1/2	13	0,90	500
BK3-DN13-G5/8	13	83	17,5	39,5	16	G5/8	16	G5/8	13	0,90	500
BK3-DN20-G3/4	20	95	24,5	47,5	18	G3/4	18	G3/4	20	1,95	315
BK3-DN25-G1	25	113	29	56,5	20	G1	20	G1	25	2,40	315
BK3-DN25/32-G1 1/4	25	120	29	57	22	G1 1/4	22	G1 1/4	25	2,64	315
BK3-DN32-G1 1/4	30	111	39	55	22	G1 1/4	22	G1 1/4	30	5,40	350
BK3-DN40-G1 1/2	38	130	53	65	24	G1 1/2	24	G1 1/2	38	9,40	350
BK3-DN50-G2	48	150	58	75	26	G2	26	G2	48	13,00	350

ANSI B1.20.1 NPT FEMALE THREAD

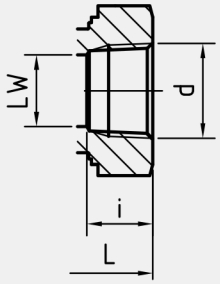

Type	LW	L	b	S	i	d	i_1	d_2	LW_1	Weight [Kg]	PN [bar]
BK3-DN4-1/8"NPT	5	69	13	34,5	10,5	1/8"NPT	10,5	1/8"NPT	4	0,55	500
BK3-DN6-1/4"NPT	6	69	13	34,5	13,7	1/4"NPT	13,7	1/4"NPT	6	0,55	500
BK3-DN10-3/8"NPT	10	72	16	36	13,5	3/8"NPT	13,5	3/8"NPT	10	0,77	500
BK3-DN13-1/2"NPT	13	83	17,5	39,5	17	1/2"NPT	17	1/2"NPT	13	0,90	500
BK3-DN20-3/4"NPT	20	95	24,5	47,5	18,3	3/4"NPT	18,3	3/4"NPT	20	1,95	315
BK3-DN25-1"NPT	25	113	29	56,5	21,6	1"NPT	21,6	1"NPT	25	2,40	315
BK3-DN25/32-1 1/4"NPT	25	120	29	57,5	22,1	1 1/4"NPT	22,1	1 1/4"NPT	25	2,65	315
BK3-DN32-1 1/4"NPT	30	120	39	60	22,1	1 1/4"NPT	22,1	1 1/4"NPT	30	5,40	350
BK3-DN40-1 1/2"NPT	38	140	53	70	22,1	1 1/2"NPT	22,1	1 1/2"NPT	38	9,40	350
BK3-DN50-2"NPT	48	150	58	75	30,3	2"NPT	30,3	2"NPT	48	13,00	350

DIN 2353 / ISO 8434-1 LIGHT SERIES

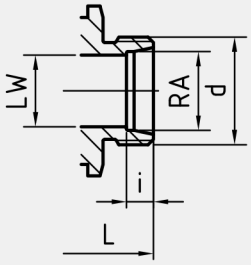

Type	LW	RA	L	b	S	i	d	i_1	d_1 [1]	LW_1	Weight [Kg]	PN [bar]
BK3-DN4-6L	5	6	67	13	34,5	7	M 12x1,5	10	G1/8	4	0,50	500
BK3-DN6-8L	6	8	67	13	34,5	7	M 14x1,5	14	G1/4	6	0,52	500
BK3-DN8-10L	8	10	74	13	34,5	7	M 16x1,5	14	G1/4	6	0,54	500
BK3-DN10-12L	10	12	74	16	36	7	M 18x1,5	14	G3/8	10	0,73	500
BK3-DN13-15L	13	15	82	17,5	39,5	7	M 22x1,5	16,3	G1/2	13	0,85	500
BK3-DN13-18L	13	18	82	17,5	39,5	7,5	M 26x1,5	16	G5/8	13	0,89	500
BK3-DN20-22L	20	22	101	24,5	47,5	7,5	M 30x2	18	G3/4	20	1,87	315
BK3-DN25-28L	25	28	108	29	56,5	7,5	M 36x2	20	G1	25	2,45	315
BK3-DN25/32-35L	25	35	112	29	57	10,5	M 45x2	22	G1 1/4	25	2,90	315

Please note the pressure ratings of the tube connections!
[1] Transition adapters for light and heavy series on request.

Abbildungen unverbindlich, Konstruktions-, Maß- und Werkstoffänderungen vorbehalten
illustrations are non-binding, all designs, configurations, measurements and materials are subject to change without prior notice

© 2020 - STASTO International KG

3-way high pressure ball valve series BA696, BA697

CONNECTION TYPE (CONNECTIONS 1 AND 3)

DIN 2353 / ISO 8434-1 HEAVY SERIES

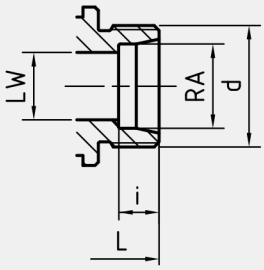

DIMENSIONS

Type	LW	RA	L	b	S	i	d	i_1	d_1 (1)	LW_1	Weight [Kg]	PN [bar]
BK3-DN4-8S	5	8	73	13	34,5	7	M 16x1,5	10	G1/8	4	0,52	500
BK3-DN6-10S	6	10	73	13	34,5	7,5	M 18x1,5	14	G1/4	6	0,54	500
BK3-DN8-12S	8	12	76	13	34,5	7,5	M 20x1,5	14	G1/4	6	0,56	500
BK3-DN10-14S	10	14	80	16	36	8	M 22x1,5	14	G3/8	10	0,73	500
BK3-DN13-16S	13	16	86	17,5	39,5	8,5	M 24x1,5	16,3	G1/2	13	0,86	500
BK3-DN13-20S	13	20	90	17,5	39,5	10,5	M 30x2	16	G5/8	13	0,94	500
BK3-DN20-25S	20	25	109	24,5	47,5	12	M 36x2	18	G3/4	20	1,95	315
BK3-DN25-30S	25	30	120	29	56,5	13,5	M 42x2	20	G1	25	2,65	315
BK3-DN25/32-38S	25	38	124	29	57	16	M 52x2	22	G1 1/4	25	3,10	315

SAE J514/ISO/DIS11926-1 FEMALE THREAD

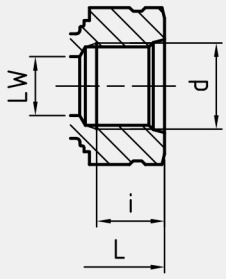

Type	LW	L	b	S	i	d	i_1	d_3	LW_1	Weight [Kg]	PN [bar]
BK3-DN6-7/16"UNF	5	69	13	34,5	12	7/16"-20 UNF	12	7/16"-20 UNF	6	0,55	500
BK3-DN10-9/16"UNF	10	72	16	36	13	9/16"-18 UNF	13	9/16"-18 UNF	7,5	0,77	500
BK3-DN13-3/4"UNF	13	83	17,5	39,5	15	3/4"-16 UNF	15	3/4"-16 UNF	13	0,90	500
BK3-DN20-1 1/16"UN	20	95	24,5	47,5	20	1 1/16"-12 UN	20	1 1/16"-12 UN	16	1,95	315
BK3-DN25-1 5/16"UN	25	113	29	56,5	20	1 5/16"-12 UN	20	1 5/16"-12 UN	21	2,80	315
BK3-DN32-1 5/8"UN	30	111	39	60	20	1 5/8"-12 UN	20	1 5/8"-12 UN	30	7,00	350
BK3-DN40-1 7/8"UN	38	140	53	70	20	1 7/8"-12 UN	20	1 7/8"-12 UN	38	10,50	350
BK3-DN50-2 1/2"UN	48	150	58	75	20	2 1/2"-12 UN	20	2 1/2"-12 UN	48	14,50	350

Please note the pressure ratings of the tube connections!
(1) Transition adapters for light and heavy series on request.

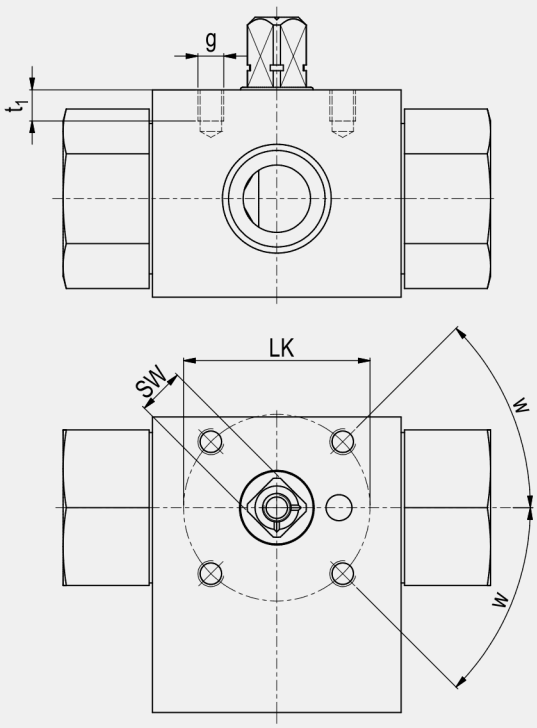

ASSEMBLING THREADS AS PER ISO 5211

DN	SW	LK	g	t_1	w	ISO 5211
4	9	36	M5	6	30°*	(F03)*
6	9	36	M5	6	30°*	(F03)*
10	9	36	M5	7	45°	F03
13	9	36	M5	6	45°	F03
16	12	42	M5	8	45°	F04
20	14	50	M6	10	45°	F05
25	14	50	M6	10	45°	F05
25/32	14	50	M6	10	45°	F05
25/40	14	50	M6	10	45°	F05

*30° does not correspond to ISO 5211

Abbildungen unverbindlich, Konstruktions-, Maß- und Werkstoffänderungen vorbehalten
illustrations are non-binding, all designs, configurations, measurements and materials are subject to change without prior notice

© 2020 - STASTO International KG

PORTING PATTERNS

L

SB50

T

SB51

Pressure inlet only from center port (port 2)!

FLOW CHARACTERISTICS BK3-L/T

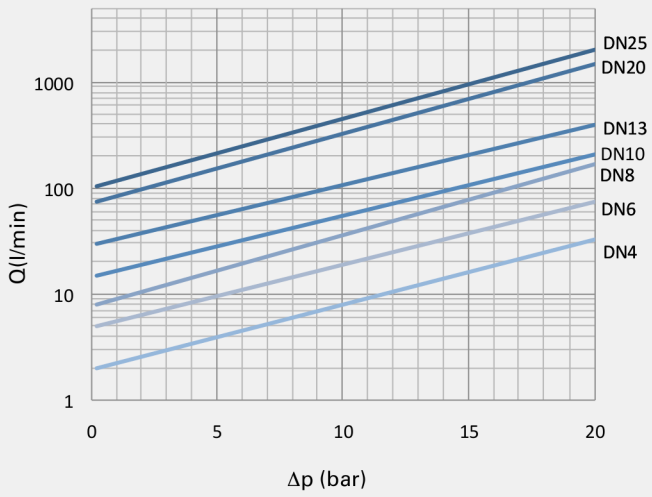

Abbildungen unverbindlich, Konstruktions-, Maß- und Werkstoffänderungen vorbehalten
illustrations are non-binding, all designs, configurations, measurements and materials are subject to change without prior notice

© 2020 - STASTO International KG