Partnership. With Guarantee.

Strainer made of ductile cast iron
Series ST006



Design type	strainer with integrated mesh filter, Mesh size see table
Connection	Flanges DN15...DN300 according to EN1092-2, PN25
Overall length	EN558-1R1
Materials	Housing Ductile iron EN-GJS-400-15, Filter insert Stainless steel 1.4301, Cover seal Graphite
Application range	Gases and liquids of group 2 in accordance with PED 2014/68/EU that do not attack the materials used
Medium temperature	-10...+350°C
Operating pressure	Nominal pressure according to the pressure-temperature table
Mounting type	Installation in rigid piping system
Mounting position	horizontal
Special version	Fine mesh filter with Mesh size 0,25mm

Pressure-temperature table in bar

-10...+120°C	200°C	225°C	250°C	300°C	350°C
25	23	22,4	21,8	20	17,5

Intermediate values of the maximum operating pressures may be calculated by linear interpolation between the nearest lower and higher temperature values.

+43 512 52076
austria@stasto.eu
© STASTO Automation KG

Dimensions

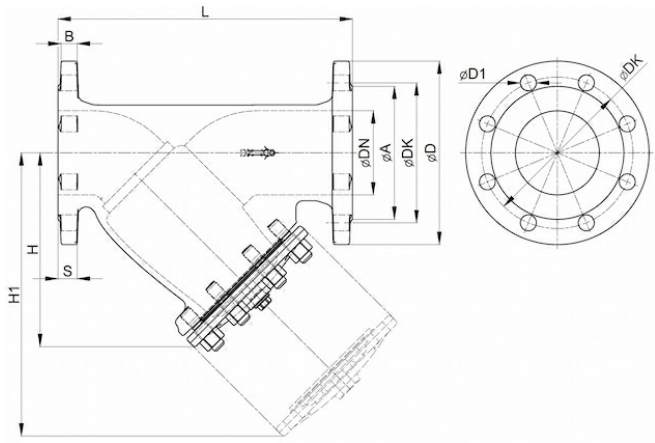

DN [mm]	A	B	D	DK	D1	H	H1	L	N	S	Mesh size [mm]	Weight [approx. kg]	Type
15	45	12	95	65	14	75	115	130	4	14	0,6	2,4	ST006-15
20	58	14	105	75	14	75	115	150	4	16	0,6	3,3	ST006-20
25	68	14	115	85	14	90	135	160	4	16	0,8	3,8	ST006-25
32	78	14	140	100	18	90	135	180	4	16	0,8	5,0	ST006-32
40	88	15	150	110	18	110	170	200	4	18	0,8	6,5	ST006-40
50	102	17	165	125	18	140	210	230	4	20	0,8	9,6	ST006-50
65	122	17	185	145	18	160	240	290	4	20	0,8	12,5	ST006-65
80	138	19	200	160	18	190	320	310	8	22	1,2	18,0	ST006-80
100	158	21	220	180	22	240	360	350	8	24	1,2	25,0	ST006-100
125	188	23	250	210	26	275	425	400	8	26	1,2	39,0	ST006-125
150	212	23	285	240	26	310	485	480	8	26	1,2	61,0	ST006-150
200	274	27	360	310	26	360	580	600	12	30	1,2	109,0	ST006-200
250	331	29	425	370	30	470	680	730	12	32	1,2	162,0	ST006-250
300	389	30	485	430	30	560	820	850	16	34	1,2	280,0	ST006-300

Illustrations non-binding
Design, dimensional and material changes reserved

+43 512 52076
austria@stasto.eu
© STASTO Automation KG