Partnership. With Guarantee.

Pressure regulator G1/2" and G3/4"
Series Modul RE03

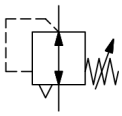

Design type	Diaphragm pressure regulator with secondary venting
Connection	G1/2" and G3/4" according to ISO228/1
Materials	Housing Zinc die casting, Seals NBR, Spring cap POM
Function	Secondary pressure regulation
Locking mechanism	Pressure setting can be locked by pressing in the rotary knob
Mounting position	any
Medium	filtered compressed air
Medium temperature	0...+60°C, (with appropriately conditioned compressed air -10...+60°C)
Ambient temperature	-10...+60°C
Inlet pressure	maximum 16bar
Control ranges	0,1...3/0,2...6/0,5...10 and 0,5...16bar
Flow direction	is marked by an arrow
Scope of delivery	including pressure gauge

+43 512 52076
austria@stasto.eu
© STASTO Automation KG

Dimensional drawing

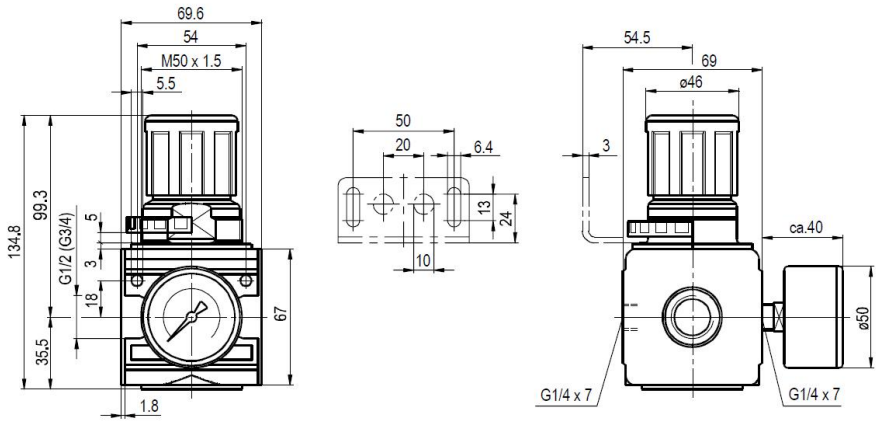

Connection	Flow rate at 6 bar* [Nl/min]	Pressure range [bar]	Type
G1/2"	6000	0,1...3	RE03-12-0,1/3-MA
G1/2"	6000	0,2...6	RE03-12-0,2/6-MA
G1/2"	6000	0,5...10	RE03-12-0,5/10-MA
G1/2"	6000	0,5...16	RE03-12-0,5/16-MA
G3/4""	6000	0,1...3	RE03-34-0,1/3-MA
G3/4"	6000	0,2...6	RE03-34-0,2/6-MA
G3/4"	6000	0,5...10	RE03-34-0,5/10-MA
G3/4"	6000	0,5...16	RE03-34-0,5/16-MA
*Flow rate data at inlet pressure of 8bar, outlet pressure of 6bar and 1bar Pressure drop			

Flow diagram for control range 0,5...10 bar

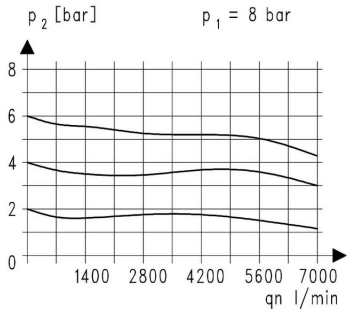

Accessories

Designation	Type
Locknut M50x1,5	MPN03-12/34
Holding angle with nut M50x1,5	MMP03-12/34
Holding angle with 2 screws	MMB03-12/34

Illustrations non-binding
Design, dimensional and material changes reserved

© STASTO Automation KG