Partnership. With Guarantee.

Stainless steel ball valves with pneumatic rotary actuator
Series BA891



Design type	Ball valve: Shut-off valve with floating ball, full bore passage, antistatic version, Compensation hole Actuator: Piston actuator with 2 opposing pistons, elastic sealing, actuator in all details in accordance with ISO 5211 or according to NAMUR recommendations, End positions adjustable on both sides +/-5°
Function	available in double-acting or single-acting Version
Connection	RP1/4"...RP4" according to ISO7/1
Materials Standard version	Ball valve: Body and ball stainless steel 1.4401, Ball seal graphite-reinforced PTFE, Spindle seal PTFE/FKM Actuator: Hard anodized aluminium, Pinion, nickel-plated steel, Piston guide POM, Seals NBR
Application range	Fluids and gases of group 1 and 2 according to PED 2014/68/EU that do not attack the materials used.
Medium temperature	-20...+160°C
Ambient temperature	-20...+85°C
Operating pressure	0 bar up to Operating pressure according to table and pressure-temperature diagram, suitable for rough vacuum
Control medium	filtered and lubricated or non-lubricated compressed air
Control pressure	5,5...8 bar, Adaptation to lower pilot pressures available on request
Mounting type	Installation in rigid piping system
Mounting position	any
Approvals	Ball valve: ATEX EX II 2G Ex h IIC T6...T1 Gb / II 2D Ex h IIIC T85°C...T450°C Db, Fire-safe, TA-Luft, SIL 3 Actuator ATEX II 2G Ex h IIC T6...T3 Gb / II 2D Ex h IIIC T85°C...T200°C Db
Special version	Pinion in stainless steel, Ambient temperatures -40...+85°C or rather -20...+150°C
Accessories	assembled manual, pneumatic or electric control valve electrical end position feedback, Positioner in I/P or P/P Version Adjustment of the switching speed
Ordering note	When ordering, please also specify control pressure, operating medium, operating pressure and operating temperature.
Application note	The pressure and temperature specifications are maximum values for normal conditions, for lubricating or non-degreasing media. In particular, degreasing media reduce the specified values and increase the required torque. For these special cases, we recommend prior consultation. When selecting the valve, the lowest control pressure occurring in the system must be taken as the basis.

+43 512 52076
austria@stasto.eu
© STASTO Automation KG

Dimensions

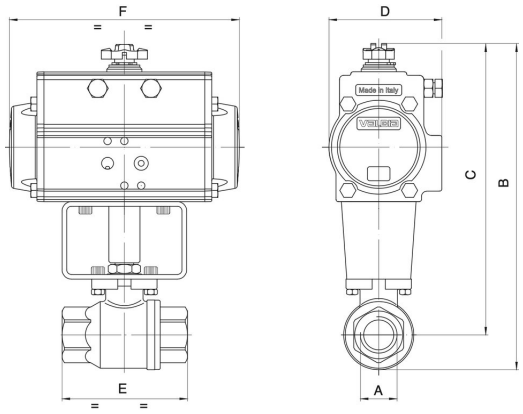

Ball valves with double-acting rotary actuator

Connection A	Nominal size DN[mm]	max. Operating pressure [bar]	B	C	D	E	F	Actuator type	Kv value [m³/h]	Weight [approx. kg]	Type
RP1/4"	8	140	121	106	45	55	110	PAD032	5,4		BA891-14-D0-A
RP1/4"	8	140	157	142	71	55	141	PAD052	5,4		BA891-14-D0-AB*
RP3/8"	10	140	121	106	45	55	110	PAD032	6		BA891-38-D0-A
RP3/8"	10	140	157	142	71	55	141	PAD052	6		BA891-38-D0-AB*
RP1/2"	15	140	127	109	45	66	110	PAD032	16,3		BA891-12-D0-A
RP1/2"	15	140	163	145	71	66	141	PAD052	16,3		BA891-12-D0-AB*
RP3/4"	20	105	222	199	81	79	164	PAD063	29,5		BA891-34-D0-A
RP1"	25	105	231	204	81	93	164	PAD063	43		BA891-10-D0-A
RP11/4"	32	64	240	208	81	100	164	PAD063	89		BA891-114-D0-A
RP11/2"	40	64	286	246	95	110	210	PAD075	230		BA891-112-D0-A
RP2"	50	64	301	253	95	131	210	PAD075	265		BA891-20-D0-A
RP21/2"	65	25	341	281	106	159	241	PAD085	540		BA891-212-D0-A
RP3"	80	25	376	304	123	185	275	PAD100	873		BA891-30-D0-A
RP4"	100	25	464	375	137	222	333	PAD115	1390		BA891-40-D0-A

*With the suffix B, the ball valves are equipped with the PAD052 actuator.. When using limit switch boxes and NAMUR control valves, B types must be used

Ball valves with single-acting rotary actuator

Connection A	Nominal size DN[mm]	max. Operating pressure [bar]	B	C	D	E	F	Actuator type	Kv value [m³/h]	Weight [approx. kg]	Type
RP1/4"	8	140	157	142	71	55	141	PAS0525	5,4		BA891-14-S0-A
RP3/8"	10	140	157	142	71	55	141	PAS0525	6		BA891-38-S0-A
RP1/2"	15	140	163	145	71	66	141	PAS0525	16,3		BA891-12-S0-A
RP3/4"	20	105	254	231	106	79	241	PAS0855	29,5		BA891-34-S0-A
RP1"	25	105	263	236	106	93	241	PAS0855	43		BA891-10-S0-A
RP11/4"	32	64	272	240	106	100	241	PAS0855	89		BA891-114-S0-A
RP11/2"	40	64	313	273	123	110	275	PAS1005	230		BA891-112-S0-A
RP2"	50	64	362	315	137	131	333	PAS1155	265		BA891-20-S0-A
RP21/2"	65	25	409	348	137	159	333	PAS1155	540		BA891-212-S0-A
RP3"	80	25	465	393	164	185	435	PAS1405	873		BA891-30-S0-A
RP4"	100	25	522	434	186	222	500	PAS1605	1390		BA891-40-S0-A

Single-acting actuators are supplied spring-closing (NC) unless otherwise ordered.

+43 512 52076
austria@stasto.eu
© STASTO Automation KG

Pressure-temperature diagram

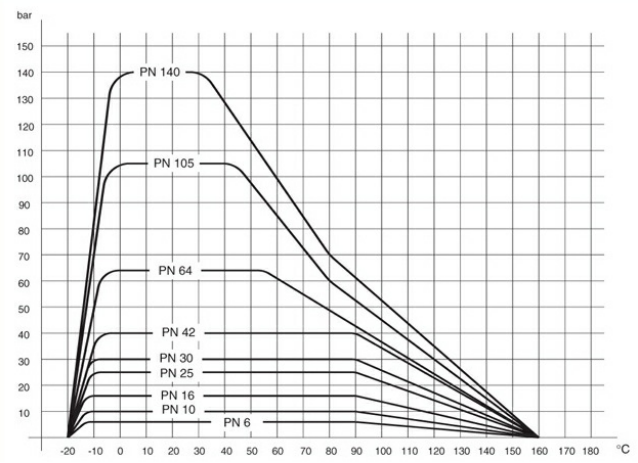

Illustrations non-binding
Design, dimensional and material changes reserved

+43 512 52076
austria@stasto.eu
© STASTO Automation KG