Short-stroke cylinder double-acting
Series SHD(M)



Design type	Short-stroke cylinder double-acting, optionally with solenoid
Heads	anodized aluminum
Piston rod	Stainless steel AISI 420
Cylinder tube	anodized aluminum
Seals	Piston rod seal PU, remaining seals NBR
End-position cushioning	mechanical
Ambient temperature	-20°C...+60°C
Medium temperature	0°C...+30°C
Lubrication	not necessary
Medium	filtered compressed air
maximum operating pressure	10bar
Note	CAD files are available in the STASTO Store at www.stasto.eu

Dimensions

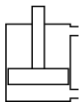

SHD

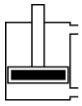

SHDM

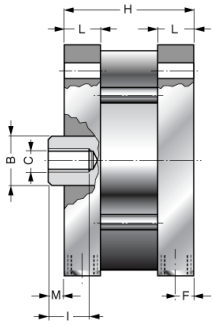

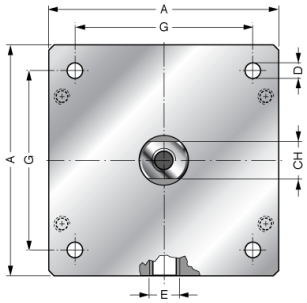

Ø	A	ØB	ØC	ØD	E	F	G	H							CH	I	L	M	Type	Type Solenoid cylinder
								Stroke [mm]												
								25	50	75	100	125	160	200						
125	139	30	M14	10,2	G1/4"	10	110	103	128	153	178	203	238	278	28	25	22	10	SHD125-..	SHDM125-..
160	180	40	M20	14,2	G3/8"	12	140	112	137	162	187	212	247	287	36	30	26	12	SHD160-..	SHDM160-..
200	220	40	M20	14,2	G3/8"	12	175	112	137	162	187	212	247	287	36	30	26	12	SHD200-..	SHDM200-..

Illustrations non-binding
Design, dimensional and material changes reserved

Version 7
198205 / Generated 2026/48 EN
MADE IN EUROPE

+43 512 52076
austria@stasto.eu
© STASTO Automation KG