Partnership. With Guarantee.

Steel flanged ball valves with pneumatic rotary actuator
Series BA043





Design type	Ball valve: Shut-off valve with floating ball, full bore passage, Compensation hole Actuator: piston actuator with 2 opposed pistons, elastic sealing, actuator in all details in accordance with ISO 5211 or according to NAMUR recommendations, End positions adjustable on both sides +/-5°
Function	available in double-acting or single-acting Version
Connection	Flanges DN15...DN150 according to EN1092, PN16
Materials Standard version	Actuator: Hard anodized aluminium, Pinion, nickel-plated steel, Piston guide POM, Seals NBR Ball valve: Steel housing, Ball stainless steel AISI 304, Ball seal PTFE, Spindle seal PTFE/FKM
Application range	Fluids and gases of group 1 and 2 in accordance with PED 2014/68/EU that do not attack the materials used.
Medium temperature	-20...+160°C
Ambient temperature	-20...+85°C
Operating pressure	Vacuum max. 10^{-3} Torr up to Nominal pressure according to table and pressure-temperature diagram
Control medium	filtered and lubricated or non-lubricated compressed air
Control pressure	5,5...8bar, Adaptation to lower pilot pressures possible on request
Mounting type	Installation in rigid piping system
Mounting position	any
Special version	Stainless steel pinion, Ball valve antistatic version ATEX EX II 2G Ex h IIC T6...T1 Gb / II 2D Ex h IIIC T85°C...T450°C Db, Actuator ATEX II 2G/D c T6 Fire-safe, Ambient temperatures from -40...+85°C or rather -20...+150°C on request
Accessories	assembled manual, pneumatic or electric control valve electrical end position feedback, Positioner in I/P or P/P version Adjustment of the switching speed
Ordering note	When ordering, please also specify pilot pressure, operating medium, operating pressure and operating temperature.
Application note	The pressure and temperature specifications are maximum values for normal conditions, for lubricating or non-degreasing media. Degreasing media in particular reduce the specified values and increase the required torque. For these special cases, we recommend prior consultation. When selecting the valve, the lowest control pressure occurring in the system must be taken as the basis.

+43 512 52076
austria@stasto.eu
© STASTO Automation KG

Dimensions

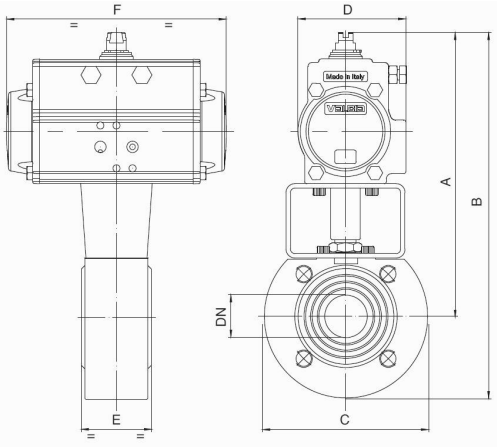

Ball valves with double-acting rotary actuator

Nominal size DN[mm]	max. operating pressure [bar] up to 85°C	A	B	C	D	E	F	Actuator type	Kv value [m 3 /h]	Weight [approx. kg]	Type
15	16	183	228,5	90	71	35	141	PAD052	19,2	3,1	BA043-15-D0
20	16	188	238	100	71	40	141	PAD052	35	3,3	BA043-20-D0
25	16	193	248	110	71	46	141	PAD052	64,5	4,1	BA043-25-D0
32	16	200	266	130	71	54	141	PAD052	103,8	5,6	BA043-32-D0
40	16	227	297	140	81	64	164	PAD063	174	6,3	BA043-40-D0
50	16	253	328	150	95	82	210	PAD075	301,3	9,2	BA043-50-D0
65	16	282	370	175	106	103	241	PAD085	545,7	14,6	BA043-65-D0
80	16	292	387	190	106	122	241	PAD085	872,5	19,6	BA043-80-D0
100	16	341	451	220	123	152	275	PAD100	1363,3	27,0	BA043-100-D0
125	16	398	523	250	137	196	333	PAD115	2360,3	49,0	BA043-125-D0
150	16	438	585	300	148	232	372	PAD125	3671,1	73,0	BA043-150-D0

For ATEX versions, the type is suffixed with -A at the end.

Ball valves with single-acting rotary actuator

Nominal size DN[mm]	max. operating pressure [bar] up to 85°C	A	B	C	D	E	F	Actuator type	Kv value [m 3 /h]	Weight [approx. kg]	Type
15	16	194	299	90	81	35	164	PAS0635	19,2	3,5	BA043-15-S0
20	16	200	250	100	81	40	164	PAS0635	35	4,1	BA043-20-S0
25	16	205	260	110	81	46	164	PAS0635	64,5	4,9	BA043-25-S0
32	16	250	319	130	106	54	241	PAS0855	103,8	9,6	BA043-32-S0
40	16	259	329	140	106	64	241	PAS0855	174	9,7	BA043-40-S0
50	16	281	356	150	123	82	275	PAS1005	301,3	13,6	BA043-50-S0
65	16	349	437	175	137	103	333	PAS1155	545,7	24,8	BA043-65-S0
80	16	372	466	190	148	122	372	PAS1255	872,5	28,3	BA043-80-S0
100	16	387	497	220	148	152	372	PAS1255	1363,3	35,8	BA043-100-S0
125	16	434	557	250	187	196	500	PAS1605	2360,3	70,5	BA043-125-S0
150	16	538	658	300	217	232	579	PAS2005	3671,1	137,8	BA043-150-S0

Single-acting actuators are supplied spring-closing (NC) unless otherwise ordered.
For ATEX versions, the type is suffixed with -A at the end.

Illustrations non-binding
Design, dimensional and material changes reserved

+43 512 52076
austria@stasto.eu
© STASTO Automation KG